Code article 86.OW11.4321.01



①

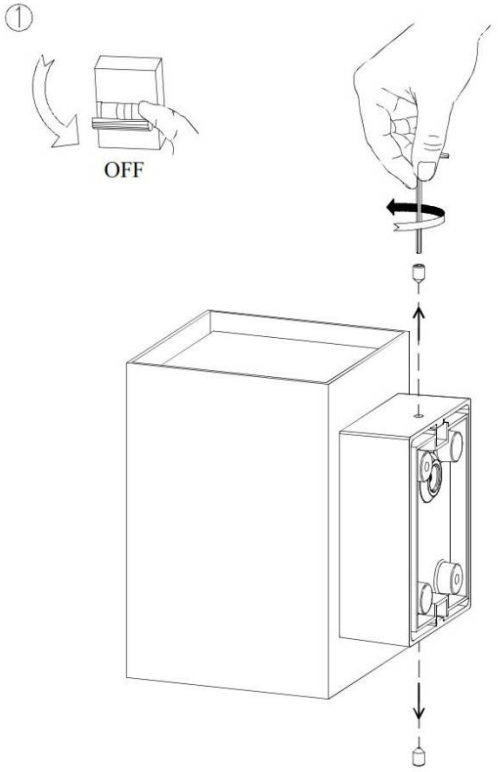

②

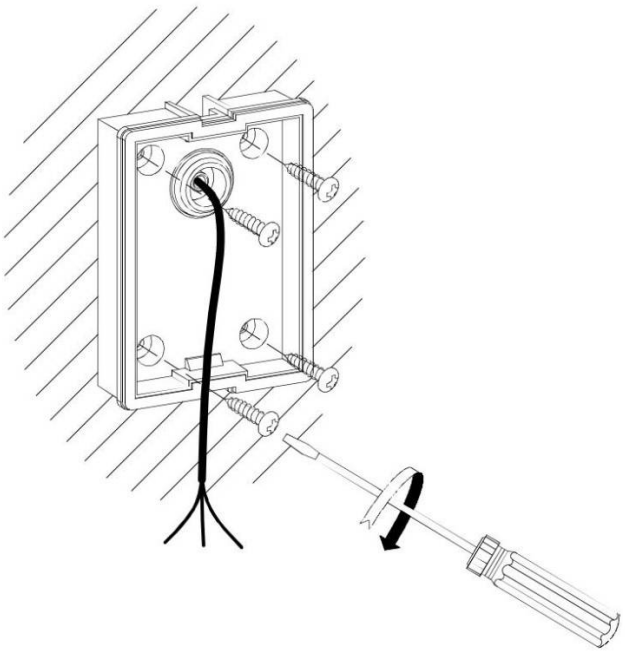

③

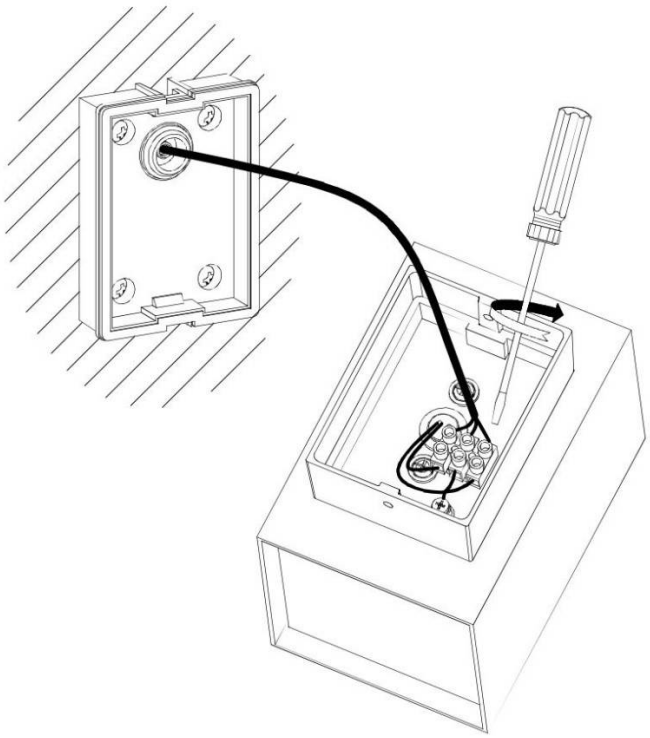

④

